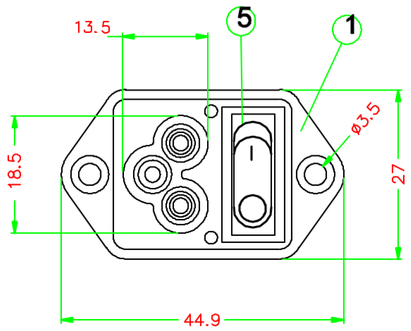

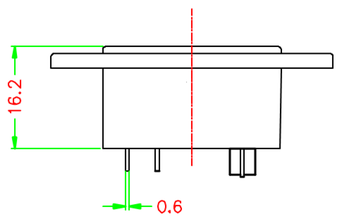

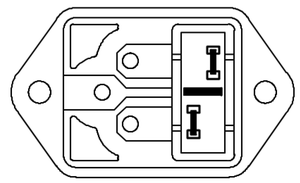

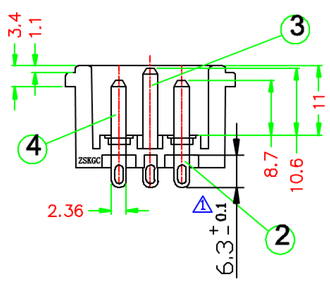

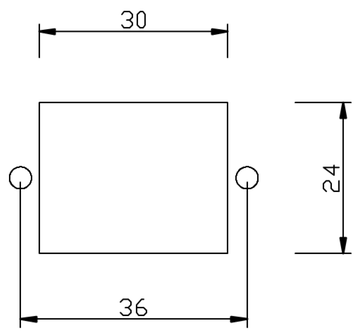

規格
SPECIFICATIONS

額定
1.RATING : *2.5A 250VAC*

絕緣電阻
2.INSULATION RESISTANCE DC 500V 100MΩ Min .

耐壓強度
3.Dielectric Strength: AC200V 1Minute.

操作溫度
4.OPERATING TEMPERATURE : −25° C TO +85° C (MAX)

焊 接
5.SOLDERING

插拔力
6.Forces Necessary to andto Withdraw The Connector:1Kg~5Kg

認可安規 : 7.SAFETY

ITEM NO.	DESCRIPTION	DRAWN	DATE

東莞市高迪電子有限公司
DONG GUAN GAO DI ELECTRONICS CO. , LTD

TOLERANCE UNLESS OTHERWISE STATED : Up to 5 ±0.2; Above 5 ~ 15 ±0.3; Above 15 ~ 30 ±0.4; Above 30 ~ 50 ±0.5; Angle ±0.3°

3RD. ANGEL'S | UNITS MM

DRAWN BY: Ming Ming Zou	DATE 10/31/13	MAT'L	
CHECKED BY: Ning Ning Su	DATE 10/31/13	FINISH	
APPROVED BY: Jia Xiang	DATE 10/31/13	SCALE	1 : 1
		SHEET NO.	1 of 1

TITLE	SWITCH+JACK		
MODLE	AC POWER SOCKET		
DWG NO.	GD-JR-307R-01_1	SIZE	A4
PART NO.		VER	R